REGULATORY SIGNS

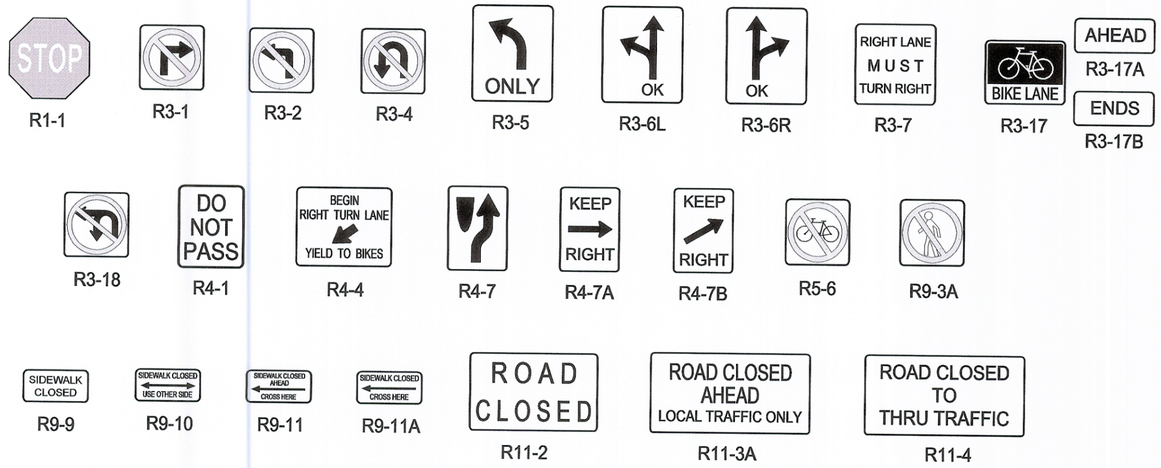

WARNING SIGNS

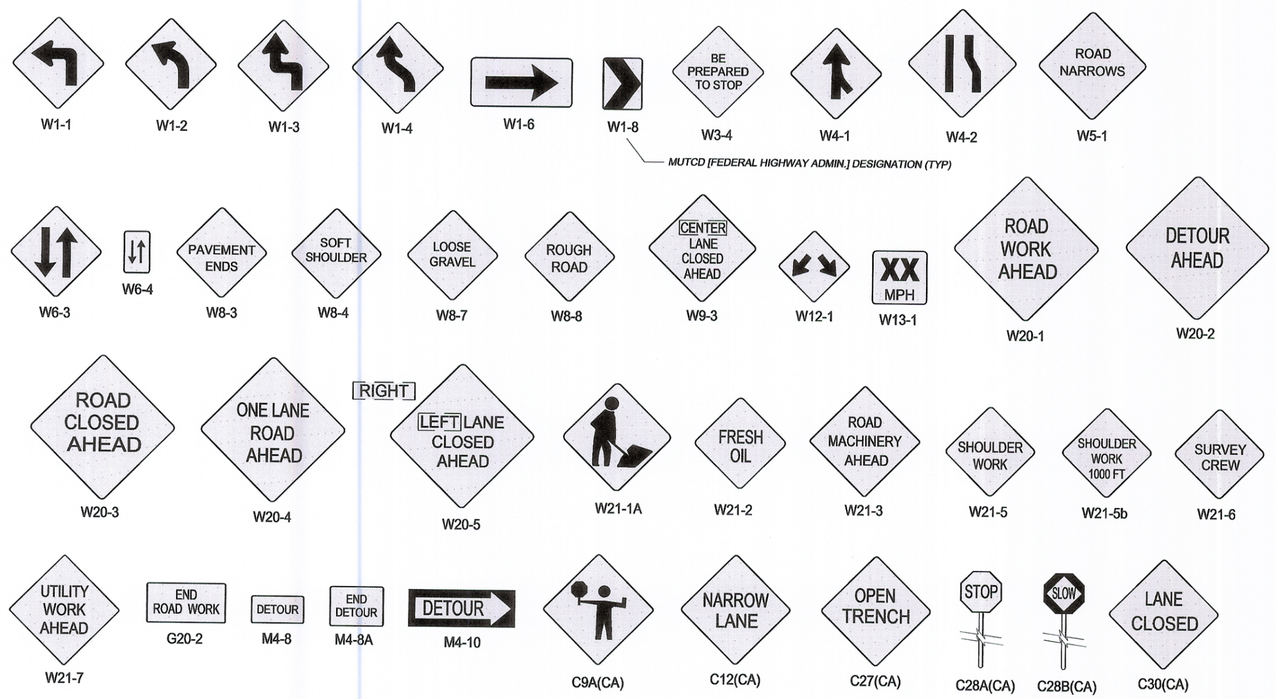

MISCELLANEOUS DEVICES

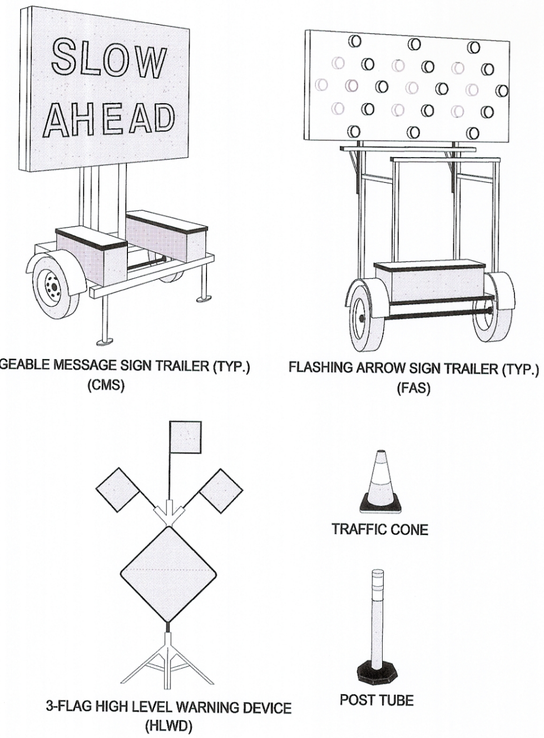

DETAIL SHEET LEGEND

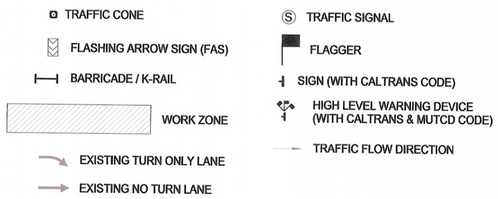

verizon

Level(3) COMMUNICATIONS

DATALOG	
INSTALLATION OF FIBER OPTIC FACILITIES	
TRAFFIC CONTROL LEGEND & DEVICES	SHEET: 9 OF: 21
Hector A. Lara DESIGN ENGINEER	DATE: 11/15/06 RCE NO: 49312 EXP DATE: 9/30/08